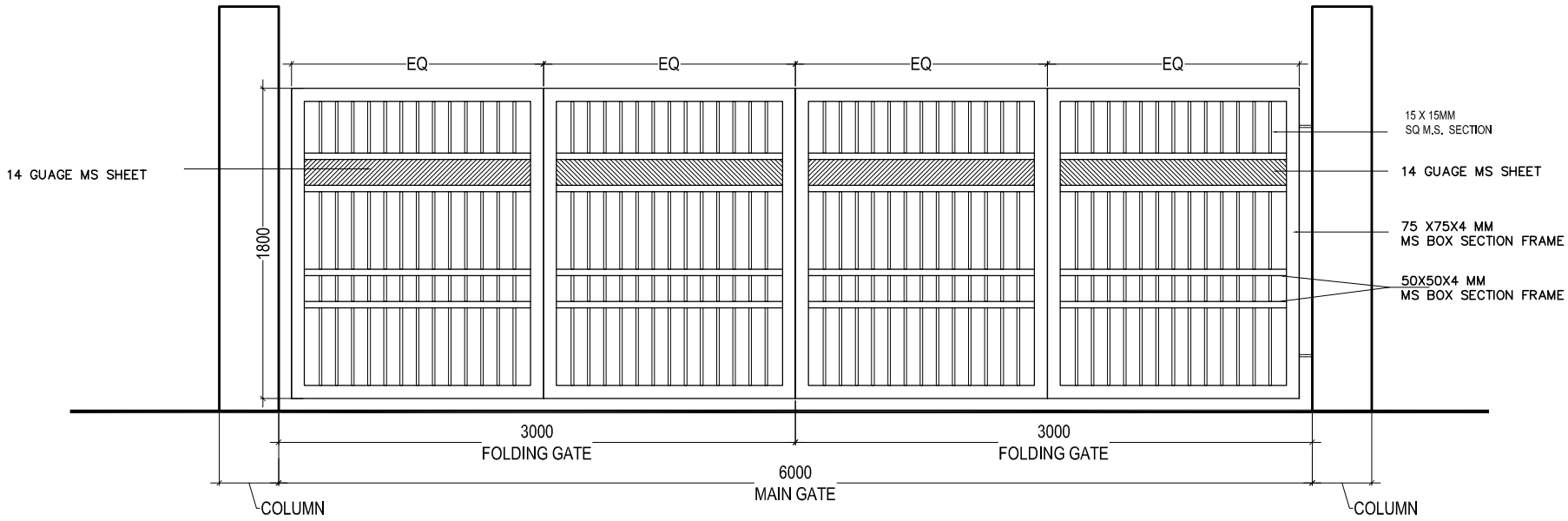

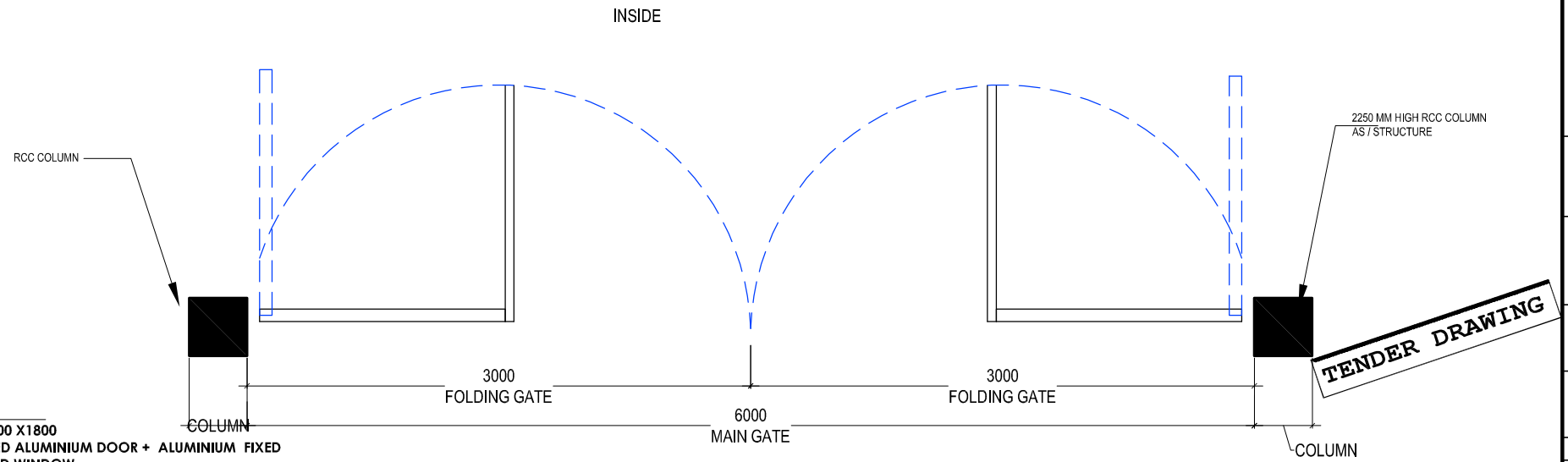

PLAN

D1-6000 X1800
GLAZED ALUMINIUM DOOR + ALUMINIUM FIXED GLAZED WINDOW

Notes

- All dimensions are to be read and not to be scaled.
- Contractor must verify all dimensions as per site before commencement of any work.
- Contractor must notify Architect and/ or Project Manager of all discrepancies in the drawing & clarify with them.
- All door and window openings are to be verified as per schedule.
- All services to be co-ordinated with structures.
- Contractor must take approval of layout from Architect before start of construction.
- Architectural drawings are to be co-related with structural drawings.

No.	Date	By	Description

ISSUES

No.	Date	By	Description

Revisions

LOCAL AUTHORITY

R-SETI DIRECTOR

ARCHITECTS

Architects :

GEOTECH TECHNICAL ASSOCIATES (P) LTD.
G T A

7,MAHAMANAPURI COLONY,
I.T.I. ROAD,
VARANASI-221005
MOBILE : 9415268161

B-04, GROUND FLOOR,
AMRAPALI PRINCELY ESTATE,
SECTOR 76, NOIDA-201301
MOBILE : 9910297218
9818938150

Client:

CANARA BANK CENTENARY RURAL DEVELOPMENT TRUST

PROJECT TITLE

RURAL SELF EMPLOYMENT TRAINING INSTITUTE
AT AMROHA, UTTAR PRADESH

Job Title

MAIN BLOCK

Drawing Title :

DETAIL - MAIN GATE

Job No.		CE/CON./PLAN NO.
Drawn GAURAV	Checked AAMIR	CANARA/AM/RSETI - 09
Date 17/03/2023	Scale 1:125 on A3	Revisions

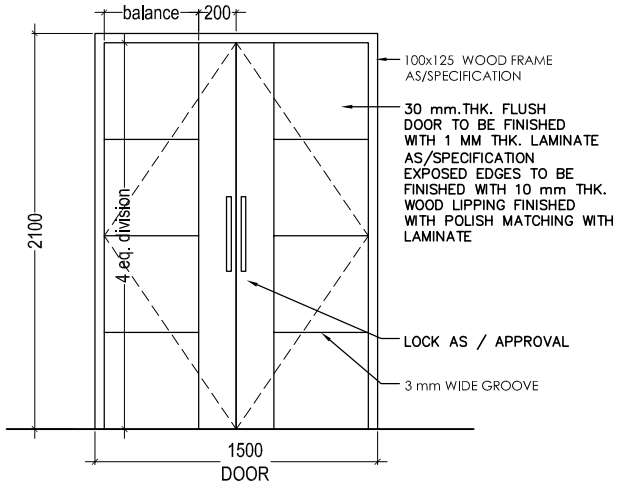

ELEVATION - D4

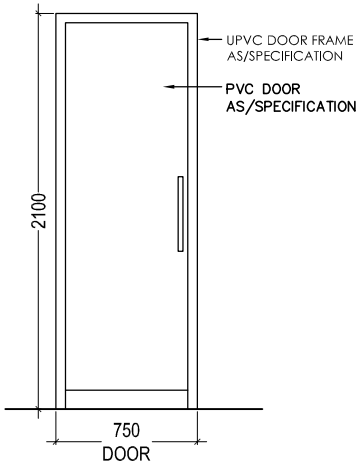

ELEVATION - D5

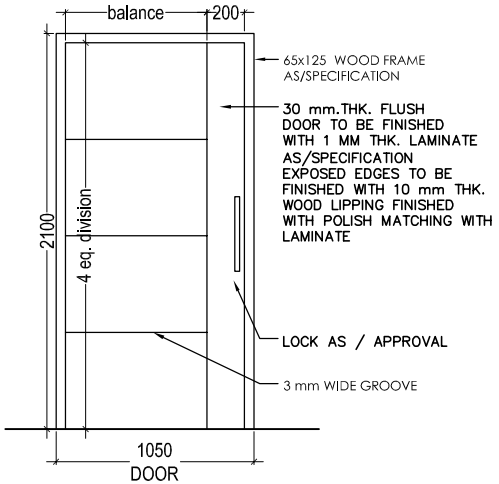

ELEVATION - D6

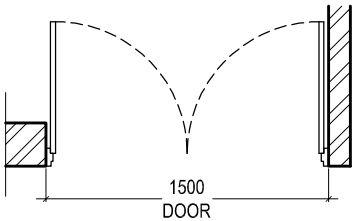

PLAN
D4-1500 X 2100
LAMINATED FLUSH DOOR

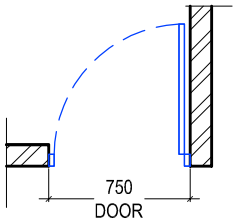

PLAN
D5-750 X 2100
PVC DOOR

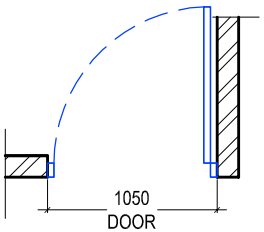

PLAN
D6-1050 X 2100
LAMINATED FLUSH DOOR

TENDER DRAWING

Notes

- All dimensions are to be read and not to be scaled.
- Contractor must verify all dimensions as per site before commencement of any work.
- Contractor must notify Architect and/ or Project Manager of all discrepancies in the drawing & clarify with them.
- All door and window openings are to be verified as per schedule.
- All services to be co-ordinated with structures.
- Contractor must take approval of layout from Architect before start of construction.
- Architectural drawings are to be co-related with structural drawings.

No.	Date	By	Description

ISSUES

No.	Date	By	Description

Revisions

LOCAL AUTHORITY

R-SETI DIRECTOR

ARCHITECTS

Architects :

GEOTECH TECHNICAL ASSOCIATES (P) LTD.

G T A

7,MAHAMANAPURI COLONY,
I.T.I. ROAD,
VARANASI-221005
MOBILE : 9415268161

B-04, GROUND FLOOR,
AMRAPALI PRINCELY ESTATE,
SECTOR 76, NOIDA-201301
MOBILE : 9910297218
9818938150

Client:

CANARA BANK CENTENARY RURAL DEVELOPMENT TRUST

PROJECT TITLE

RURAL SELF EMPLOYMENT TRAINING INSTITUTE

AT AMROHA, UTTAR PRADESH

Job Title

MAIN BLOCK

Drawing Title :

DOOR - WINDOW DETAIL

Job No.		CE/CON./PLAN NO.
Drawn GAURAV	Checked AAMIR	CANARA/AM/RSETI - 07
Date 17/03/2023	Scale 1:125 on A3	Revisions

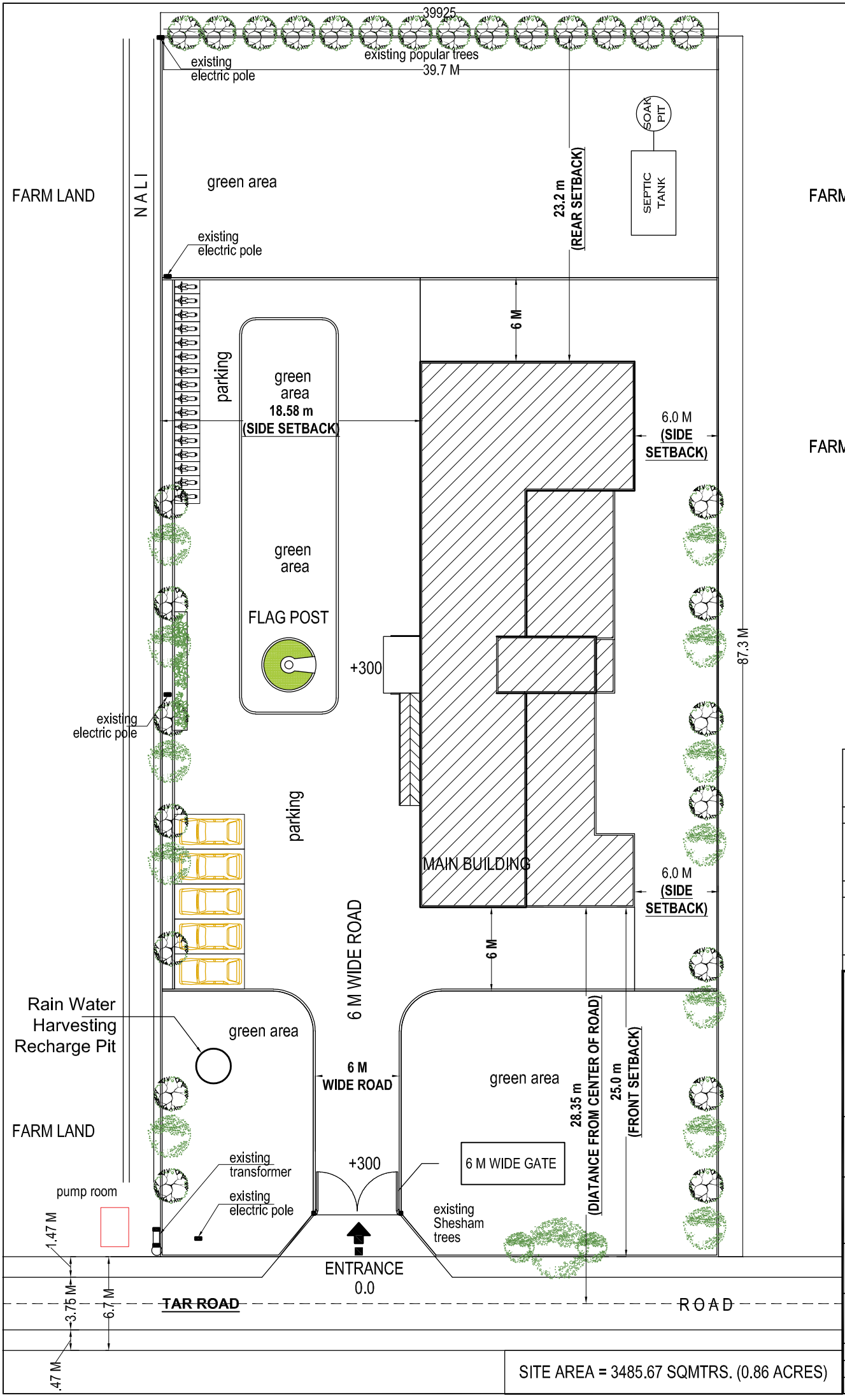

SITE AREA = 3485.67 SQMTRS. (0.86 ACRES)

LOCAL AUTHORITY

R-SETI DIRECTOR

ARCHITECTS

Architects :

GEOTECH TECHNICAL ASSOCIATES (P) LTD.

G T A

7,MAHAMANAPURI COLONY, I.T.I. ROAD, VARANASI-221005
MOBILE : 9415268161

B-04, GROUND FLOOR, AMRAPALI PRINCELY ESTATE, SECTOR 76, NOIDA-201301
MOBILE : 9910299218
9818938150

Client:

CANARA BANK CENTENARY RURAL DEVELOPMENT TRUST

PROJECT TITLE

RURAL SELF EMPLOYMENT TRAINING INSTITUTE

AT AMROHA, UTTAR PRADESH

Job Title

SITE PLAN

Drawing Title :

SITE PLAN

Job No.		CE/CON./PLAN NO. CANARA/AM/RSETI - 05
Drawn GAURAV	Checked AAMIR	
Date 08/04/2022	Scale 1:250 on A3	Revisions

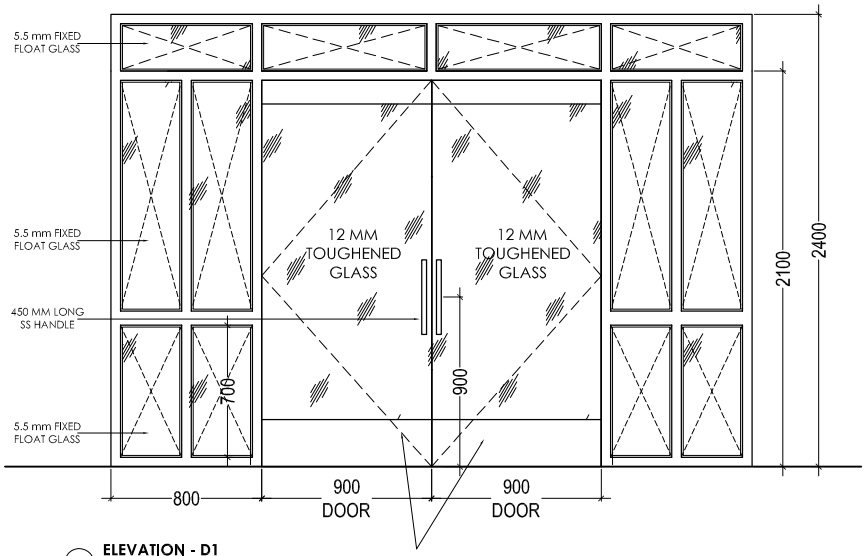

ELEVATION - D1

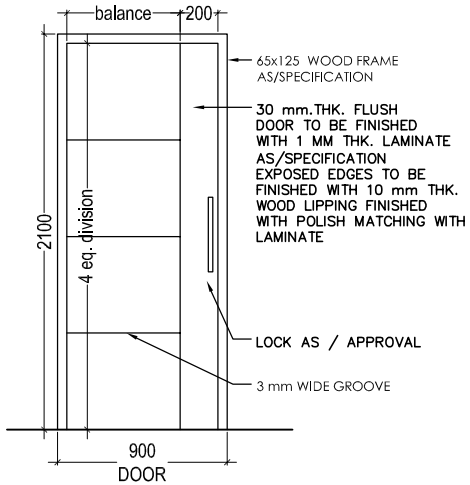

ELEVATION - D2

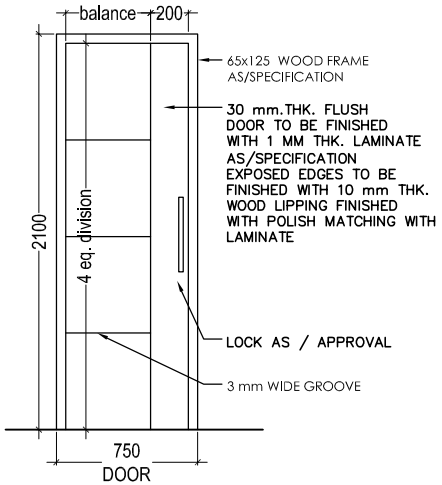

ELEVATION - D3

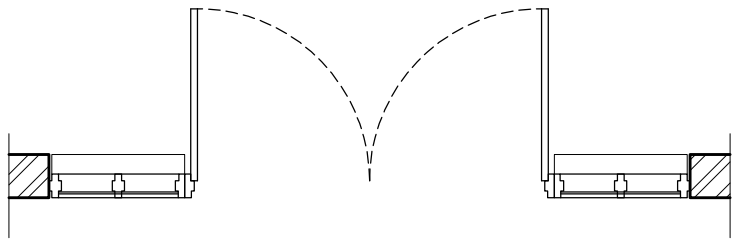

PLAN
D1-3600 X 2400
GLAZED ALUMINIUM DOOR + ALUMINIUM FIXED GLAZED WINDOW

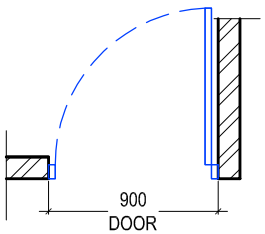

PLAN
D2-900 X 2100
LAMINATED FLUSH DOOR

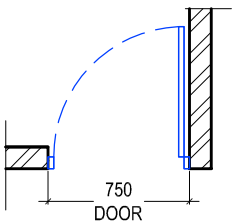

PLAN
D3-750 X 2100
LAMINATED FLUSH DOOR

TENDER DRAWING

Notes

- All dimensions are to be read and not to be scaled.
- Contractor must verify all dimensions as per site before commencement of any work.
- Contractor must notify Architect and/ or Project Manager of all discrepancies in the drawing & clarify with them.
- All door and window openings are to be verified as per schedule.
- All services to be co-ordinated with structures.
- Contractor must take approval of layout from Architect before start of construction.
- Architectural drawings are to be co-related with structural drawings.

No.	Date	By	Description

ISSUES

No.	Date	By	Description

Revisions

LOCAL AUTHORITY

R-SETI DIRECTOR

ARCHITECTS

Architects :
GEOTECH TECHNICAL ASSOCIATES (P) LTD.
G T A
7,MAHAMANAPURI COLONY,
I.T.I. ROAD,
VARANASI-221005
MOBILE : 9415268161
•
B-04, GROUND FLOOR,
AMRAPALI PRINCELY ESTATE,
SECTOR 76, NOIDA-201301
MOBILE : 9910297218
9818938150

Client:
CANARA BANK CENTENARY RURAL DEVELOPMENT TRUST

PROJECT TITLE
RURAL SELF EMPLOYMENT TRAINING INSTITUTE
AT AMROHA, UTTAR PRADESH

Job Title
MAIN BLOCK

Drawing Title :
DOOR - WINDOW DETAIL

Job No.		CE/CON./PLAN NO.
Drawn GAURAV	Checked AAMIR	CANARA/AM/RSETI - 06
Date 17/03/2023	Scale 1:125 on A3	Revisions

FRONT ELEVATION (NORTH WEST SIDE)

SIDE ELEVATION (NORTH EAST SIDE)

TENDER DRAWING

Architects :

GEOTECH TECHNICAL ASSOCIATES (P) LTD.

G T A

Client:

CANARA BANK CENTENARY RURAL DEVELOPMENT TRUST

PROJECT TITLE

RURAL SELF EMPLOYMENT TRAINING INSTITUTE

AT AMROHA, UTTAR PRADESH

Job Title

MAIN BLOCK

Drawing Title :

ELEVATIONS

Job No.		CE/CON./PLAN NO.
Drawn GAURAV	Checked AAMIR.	CANARA/AM/RSETI - 04
Date 08/04/2022	Scale 1:125 on A3	Revisions

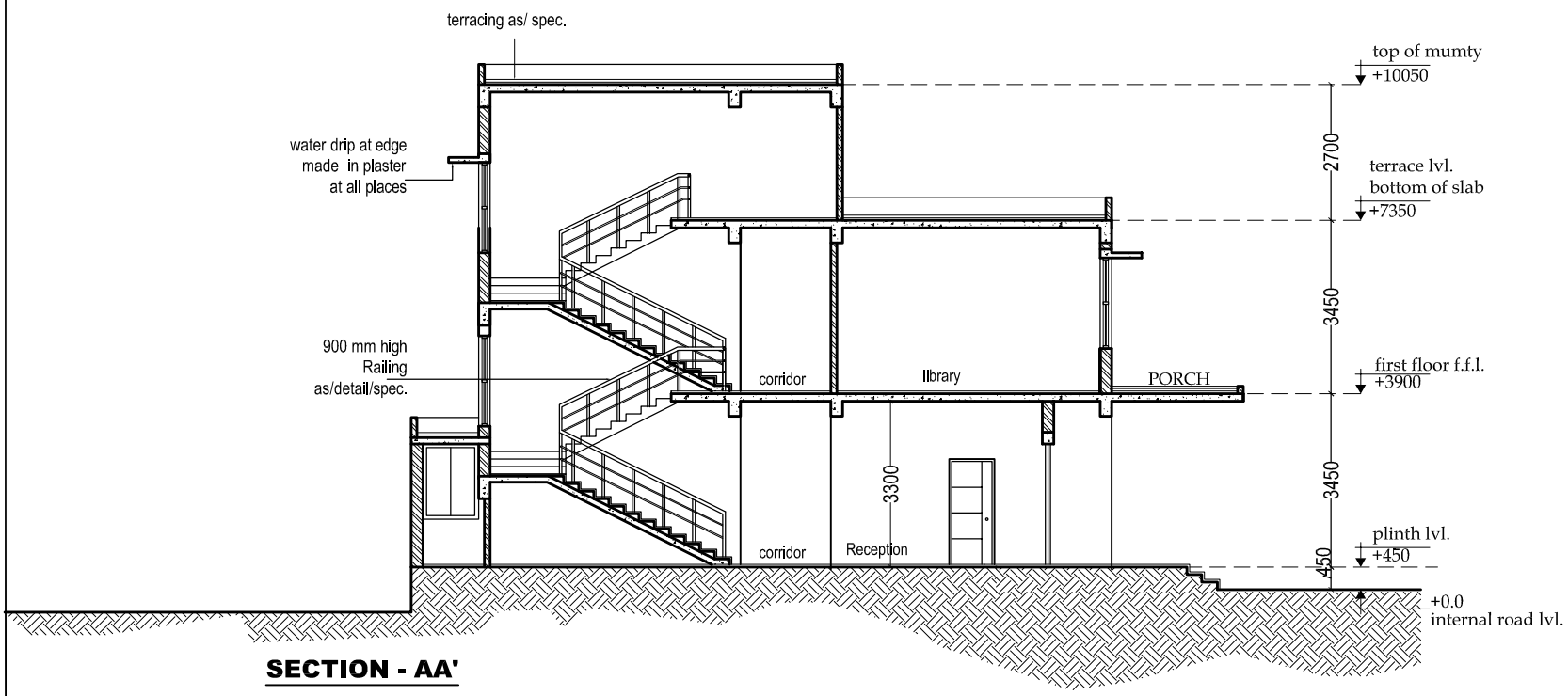

SECTION - AA'

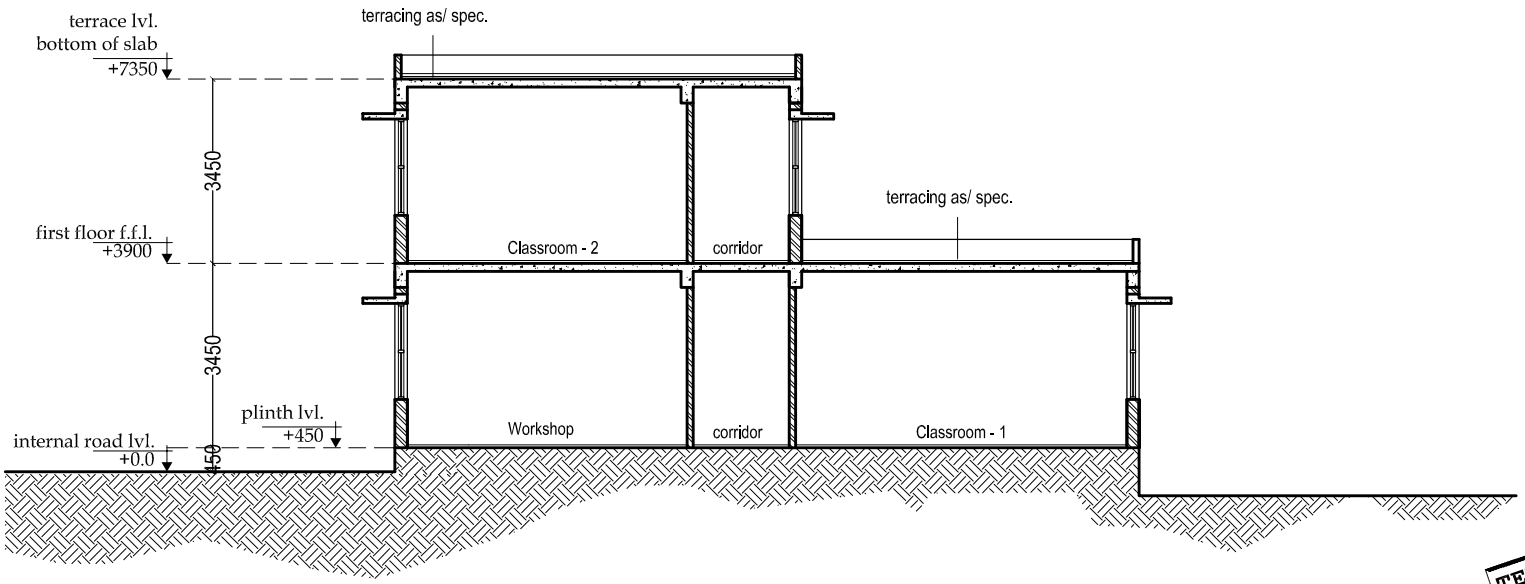

SECTION - BB'

TENDER DRAWING

Notes

- All dimensions are to be read and not to be scaled.
- Contractor must verify all dimensions as per site before commencement of any work.
- Contractor must notify Architect and/ or Project Manager of all discrepancies in the drawing & clarify with them.
- All door and window openings are to be verified as per schedule.
- All services to be co-ordinated with structures.
- Contractor must take approval of layout from Architect before start of construction.
- Architectural drawings are to be co-related with structural drawings.

No.	Date	By	Description

ISSUES

No.	Date	By	Description

Revisions

LOCAL AUTHORITY

R-SETI DIRECTOR

ARCHITECTS

Architects :

GEOTECH TECHNICAL ASSOCIATES (P) LTD.

G T A

7,MAHAMANAPURI COLONY,
I.T.I. ROAD,
VARANASI-221005
MOBILE : 9415268161

B-04, GROUND FLOOR,
AMIRAPALI PRINCELY ESTATE,
SECTOR 76, NOIDA-201301
MOBILE : 9910297218
9818938150

Client:

CANARA BANK CENTENARY RURAL DEVELOPMENT TRUST

PROJECT TITLE

RURAL SELF EMPLOYMENT TRAINING INSTITUTE

AT AMROHA, UTTAR PRADESH

Job Title

MAIN BLOCK

Drawing Title :

SECTIONS

Job No.		CE/CON./PLAN NO.
Drawn GAURAV	Checked AAMIR	CANARA/AM/RSETI - 03
Date 06/04/2022	Scale 1:125 on A3	Revisions

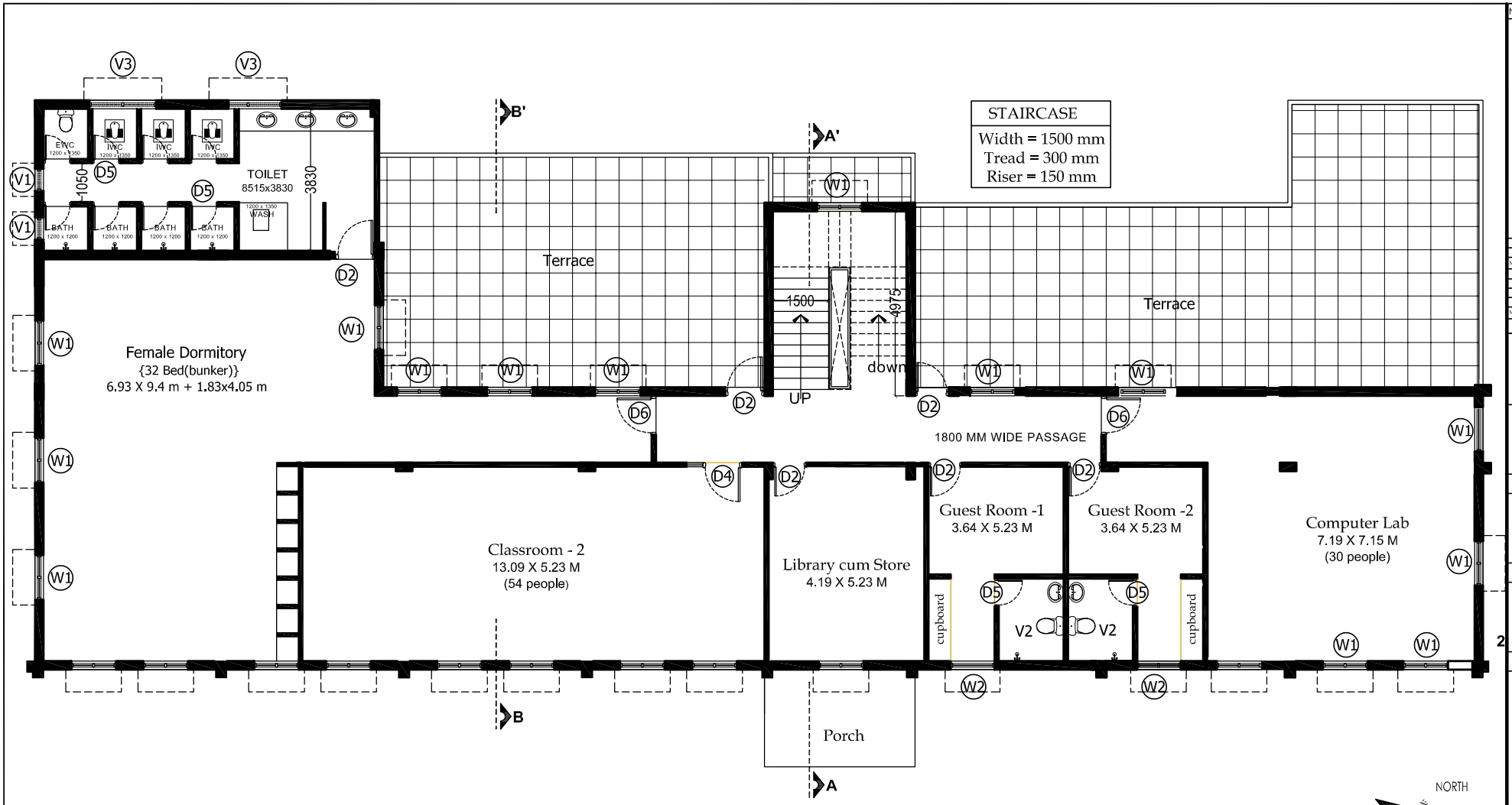

1
Elevation

2
Elevation

DOORS / WINDOWS SCHEDULE

S.NO.	TYPE	SIZE (in mm)		SILL	LINTEL	REMARKS
		WIDTH	HEIGHT			
1.	D 1	3600	2400	-	2400	Glazed Aluminium Door+window
2.	D 2	900	2100	-	2100	Flush Door
3.	D 3	750	2100	-	2100	Flush Door
4.	D 4	1500	2100	-	2100	Flush Door
5.	D5	750	2100	-	2100	PVC Door
6.	D6	1050	2100	-	2100	Flush Door
7.	D7	1800	2100	-	2100	Aluminium Door + window
8.	W1	1800	1800	900	2700	Aluminium Sliding Window
9.	V1	600	450	2250	2700	Aluminium Ventilator
10.	V2	600	1200	2250	2700	Aluminium Window
11.	V3	1800	450	2250	2700	Aluminium Ventilator
12.	op1	1050	2100	-	2100	opening in brickwork

		BUILD UP AREA (in SqMtrs.)	BUILD UP AREA (in sqft.)
1.	GROUND FLOOR	544.96	5863.76
2.	FIRST FLOOR	372.54	4008.53
3.	MUMTY	929.78	132.15
	TOTAL	**929.78**	**10004.44**

TENDER DRAWING

Notes

- All dimensions are to be read and not to be scaled.
- Contractor must verify all dimensions as per site before commencement of any work.
- Contractor must notify Architect and/ or Project Manager of all discrepancies in the drawing & clarify with them.
- All door and window openings are to be verified as per schedule.
- All services to be co-ordinated with structures.
- Contractor must take approval of layout from Architect before start of construction.
- Architectural drawings are to be co-related with structural drawings.

No.	Date	By	Description

ISSUES

No.	Date	By	Description

Revisions

LOCAL AUTHORITY

R-SETI DIRECTOR

ARCHITECTS

Architects :
GEOTECH TECHNICAL ASSOCIATES (P) LTD.
G T A
7,MAHAMANAPURI COLONY,
I.T.I. ROAD,
VARANASI-221005
MOBILE : 9415268161
B-04, GROUND FLOOR,
AMRAPALI PRINCELY ESTATE,
SECTOR 76, NOIDA-201301
MOBILE : 9910297218
9818938150

Client:
CANARA BANK CENTENARY RURAL DEVELOPMENT TRUST

PROJECT TITLE
RURAL SELF EMPLOYMENT TRAINING INSTITUTE
AT AMROHA, UTTAR PRADESH

Job Title
MAIN BLOCK

Drawing Title :
FIRST FLOOR PLAN

Job No.		CE/CON./PLAN NO.
Drawn GAURAV	Checked AAMIR	CANARA/FB/RSETI - 02
Date 06/04/2022	Scale 1:125 on A3	Revisions 01 02 03

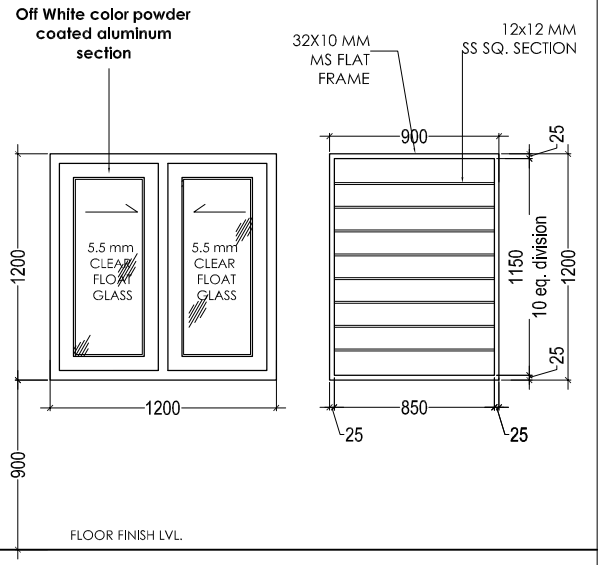

ELEVATION

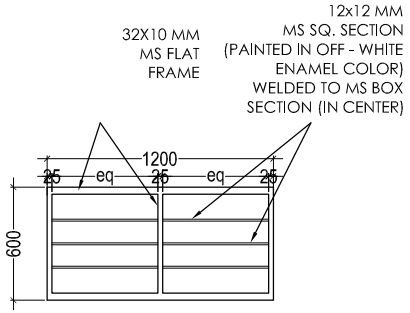

ELEVATION V2 / V3

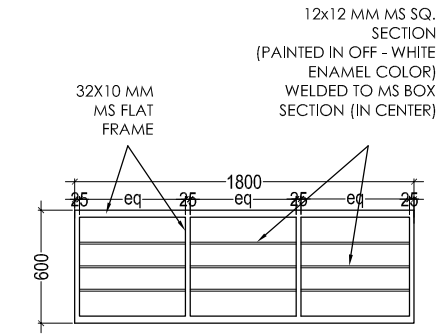

ELEVATION V3

ELEVATION -

MS GRILL FOR W6

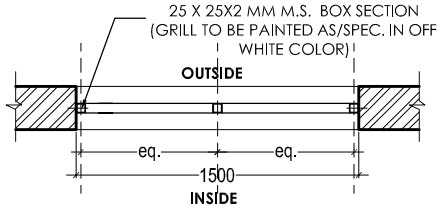

PLAN

V2 / V3-1500 X 600
MS GRILL FOR VENTILATOR

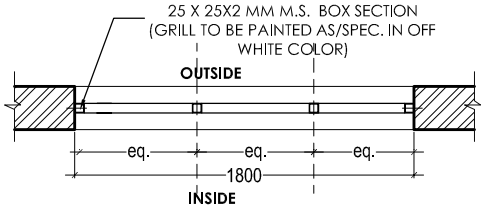

PLAN

V3-1800 X 600
MS GRILL FOR VENTILATOR

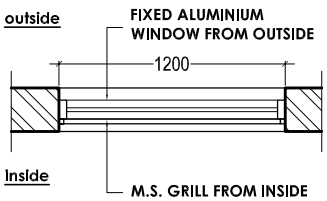

PLAN

W1-1200 X 1200
ALUMINIUM SLIDING WINDOW
(2 TRACK)

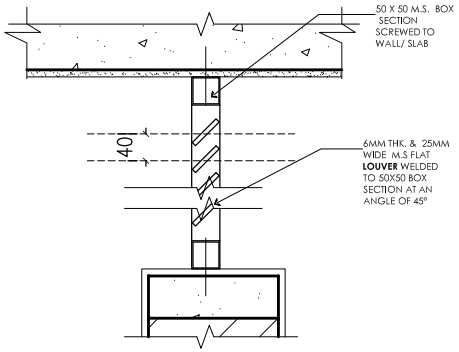

SECTION FOR V3

TENDER DRAWING

Notes

- All dimensions are to be read and not to be scaled.
- Contractor must verify all dimensions as per site before commencement of any work.
- Contractor must notify Architect and/ or Project Manager of all discrepancies in the drawing & clarify with them.
- All door and window openings are to be verified as per schedule.
- All services to be co-ordinated with structures.
- Contractor must take approval of layout from Architect before start of construction.
- Architectural drawings are to be co-related with structural drawings.

No.	Date	By	Description

ISSUES

No.	Date	By	Description

Revisions

LOCAL AUTHORITY

R-SETI DIRECTOR

ARCHITECTS

Architects :

GEOTECH TECHNICAL ASSOCIATES (P) LTD.

G T A

7,MAHAMANAPURI COLONY,
I.T.I. ROAD,
VARANASI-221005
MOBILE : 9415268161

B-04, GROUND FLOOR,
AMRAPALI PRINCELY ESTATE,
SECTOR 76, NOIDA-201301
MOBILE : 9910297218
9818938150

Client:

CANARA BANK CENTENARY RURAL DEVELOPMENT TRUST

PROJECT TITLE

RURAL SELF EMPLOYMENT TRAINING INSTITUTE

AT AMROHA, UTTAR PRADESH

Job Title

MAIN BLOCK

Drawing Title :

DOOR - WINDOW DETAIL

Job No.		CE/CON./PLAN NO.
Drawn GAURAV	Checked AAMIR	CANARA/AM/RSETI - 08
Date 17/03/2023	Scale 1:125 on A3	Revisions

1. ALL DIMENSION ARE IN MM.
2. THE FILLING OF BRICK BATS IN SOAK PIT SHALL BE DONE SIMULTANEOUSLY WITH CONSTRUCTION OF BRICKWALL AS WORK PROGGRESS.

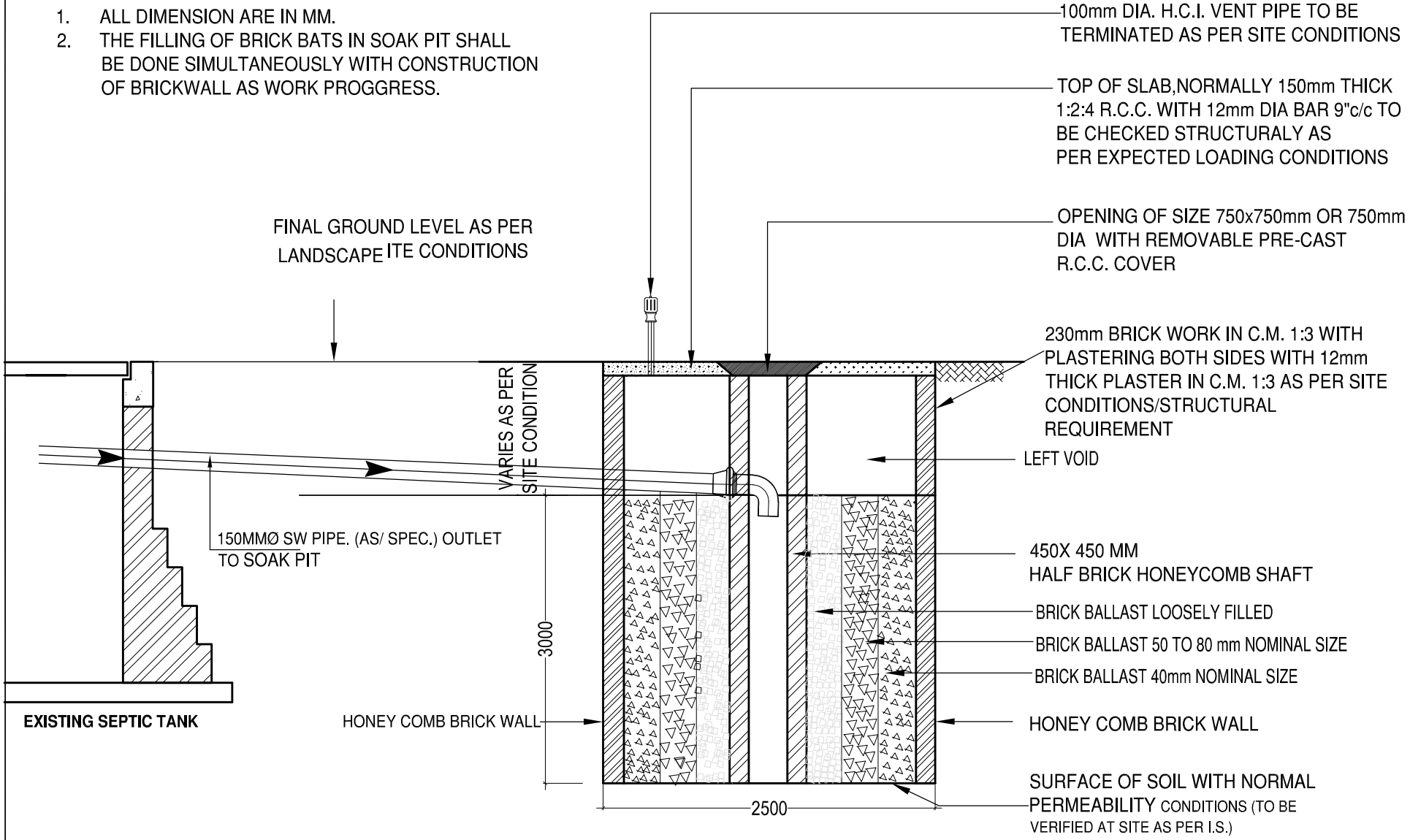

SECTION OF SOAK PIT

TENDER DRAWING

Notes

- All dimensions are to be read and not to be scaled.
- Contractor must verify all dimensions as per site before commencement of any work.
- Contractor must notify Architect and/ or Project Manager of all discrepancies in the drawing & clarify with them.
- All door and window openings are to be verified as per schedule.
- All services to be co-ordinated with structures.
- Contractor must take approval of layout from Architect before start of construction.
- Architectural drawings are to be co-related with structural drawings.

No.	Date	By	Description

ISSUES

No.	Date	By	Description

Revisions

LOCAL AUTHORITY

R-SETI DIRECTOR

ARCHITECTS

Architects :
GEOTECH TECHNICAL ASSOCIATES (P) LTD.
G T A
7,MAHAMANAPURI COLONY,
I.T.I. ROAD,
VARANASI-221005
MOBILE : 9415268161
B-04, GROUND FLOOR,
AMRAPALI PRINCELY ESTATE,
SECTOR 76, NOIDA-201301
MOBILE : 9910297218
9818938150

Client:
CANARA BANK CENTENARY RURAL DEVELOPMENT TRUST

PROJECT TITLE
RURAL SELF EMPLOYMENT TRAINING INSTITUTE
AT AMROHA, UTTAR PRADESH

Job Title
MAIN BLOCK

Drawing Title :
DETAIL - SOAK PIT

Job No.		CE/CON./PLAN NO.
Drawn GAURAV	Checked AAMIR	CANARA/AM/RSETI- 13
Date 17/03/2023	Scale 1:125 on A3	Revisions

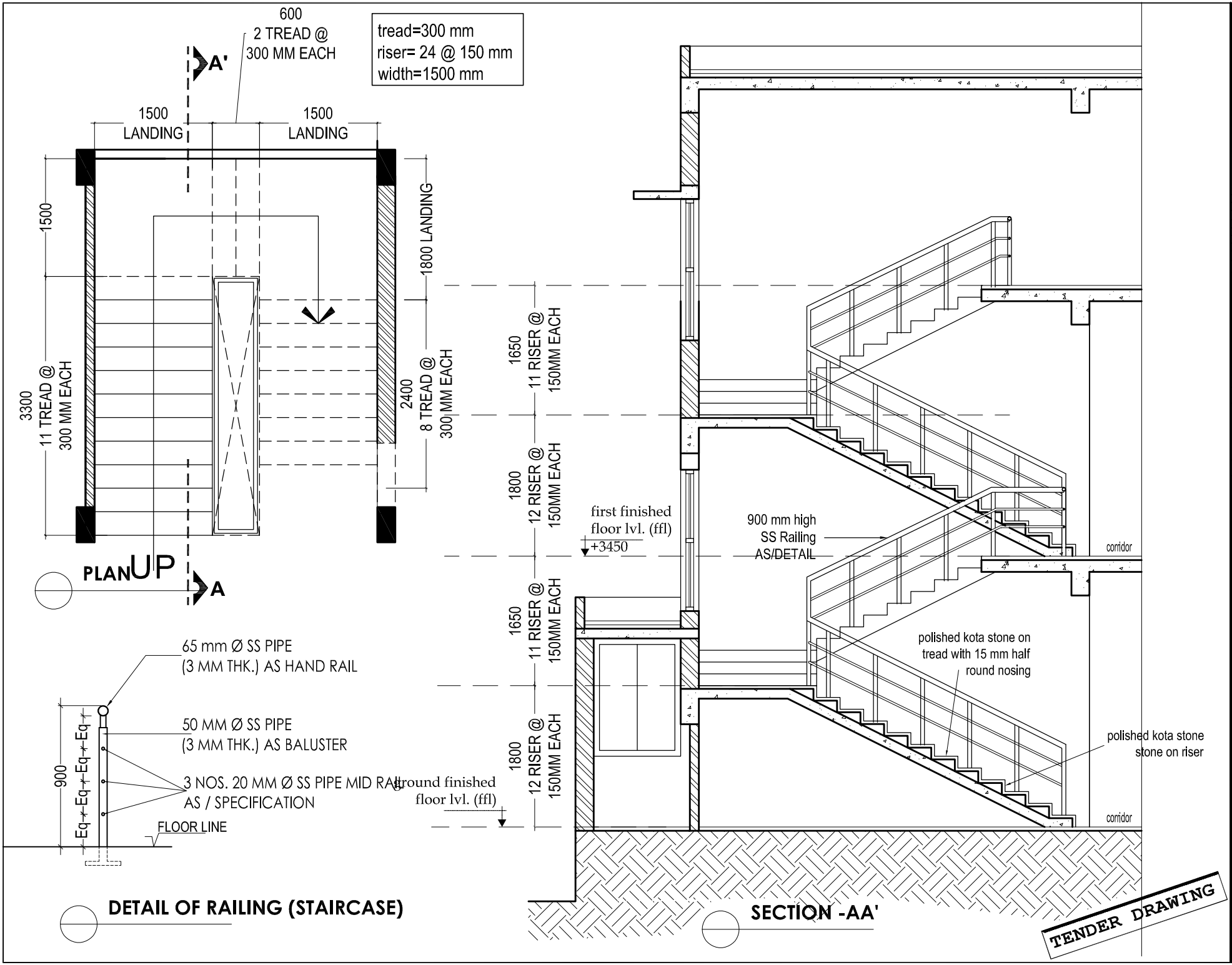

Notes

- All dimensions are to be read and not to be scaled.
- Contractor must verify all dimensions as per site before commencement of any work.
- Contractor must notify Architect and/ or Project Manager of all discrepancies in the drawing & clarify with them.
- All door and window openings are to be verified as per schedule.
- All services to be co-ordinated with structures.
- Contractor must take approval of layout from Architect before start of construction.
- Architectural drawings are to be co-related with structural drawings.

No.	Date	By	Description

ISSUES

No.	Date	By	Description

Revisions

LOCAL AUTHORITY

R-SETI DIRECTOR

+450 ARCHITECTS

Architects :

GEOTECH TECHNICAL ASSOCIATES (P) LTD.

G T A

7,MAHAMANAPURI COLONY,
I.T.I. ROAD,
VARANASI-221005
MOBILE : 9415268161

B-04, GROUND FLOOR,
AMIRAPALI PRINCELY ESTATE,
SECTOR 76, NOIDA-201301
MOBILE : 9910297218
9818938150

Client:

CANARA BANK CENTENARY RURAL DEVELOPMENT TRUST

PROJECT TITLE

RURAL SELF EMPLOYMENT TRAINING INSTITUTE

AT AMROHA, UTTAR PRADESH

Job Title

MAIN BLOCK

Drawing Title :

STAIRCASE DETAIL

Job No.		CE/CON./PLAN NO.
Drawn GAURAV	Checked AAMIR	CANARA/AM/RSETI - 10
Date 17/03/2023	Scale 1:125 on A3	Revisions

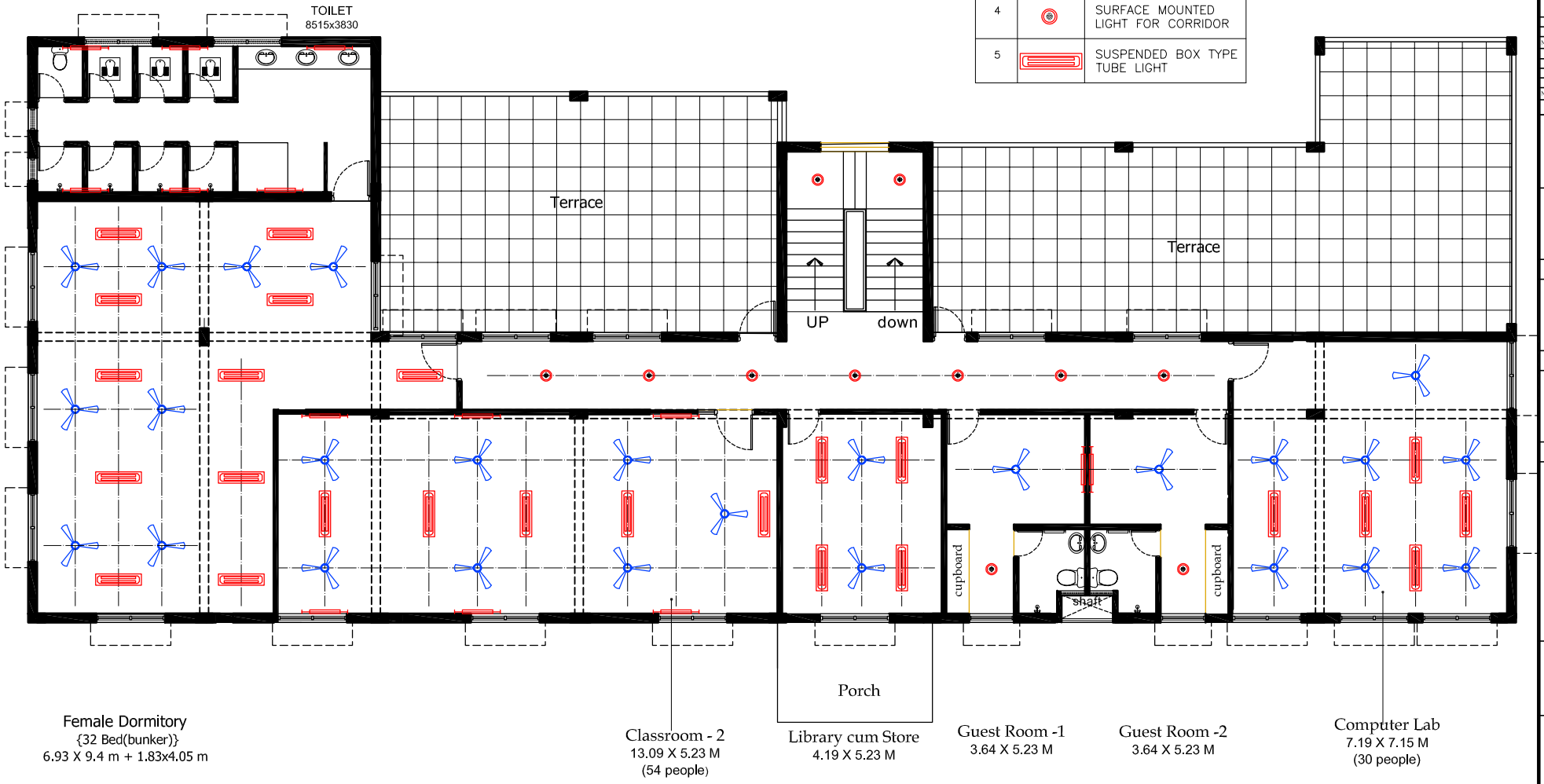

LEGEND

S.No.	SYMBOL	DESCRIPTION
1		BATTEN LIGHT (4ft)
2		BATTEN LIGHT (2ft)
3		1200 MM DIA. CEILING FAN
4		SURFACE MOUNTED LIGHT FOR CORRIDOR
5		SUSPENDED BOX TYPE TUBE LIGHT

Notes

- All dimensions are to be read and not to be scaled.
- Contractor must verify all dimensions as per site before commencement of any work.
- Contractor must notify Architect and/ or Project Manager of all discrepancies in the drawing & clarify with them.
- All door and window openings are to be verified as per schedule.
- All services to be co-ordinated with structures.
- Contractor must take approval of layout from Architect before start of construction.
- Architectural drawings are to be co-related with structural drawings.

No.	Date	By	Description

ISSUES

No.	Date	By	Description

Revisions

LOCAL AUTHORITY

R-SETI DIRECTOR

ARCHITECTS

Architects :
GEOTECH TECHNICAL ASSOCIATES (P) LTD.
G T A
7,MAHAMANAPURI COLONY,
I.T.I. ROAD,
VARANASI-221005
MOBILE : 9415268161
B-04, GROUND FLOOR,
AMRAPALI PRINCELY ESTATE,
SECTOR 76, NOIDA-201301
MOBILE : 9910297218
9818938150

Client:
CANARA BANK CENTENARY RURAL DEVELOPMENT TRUST

PROJECT TITLE
RURAL SELF EMPLOYMENT TRAINING INSTITUTE
AT AMROHA, UTTAR PRADESH

Job Title
MAIN BLOCK

Drawing Title :
FIRST FLOOR PLAN

Job No.		CE/CON./PLAN NO.
Drawn GAURAV	Checked AAMIR	CANARA/RSETI, EL - 02
Date 06/04/2022	Scale 1:125 on A3	Revisions 01 02 03

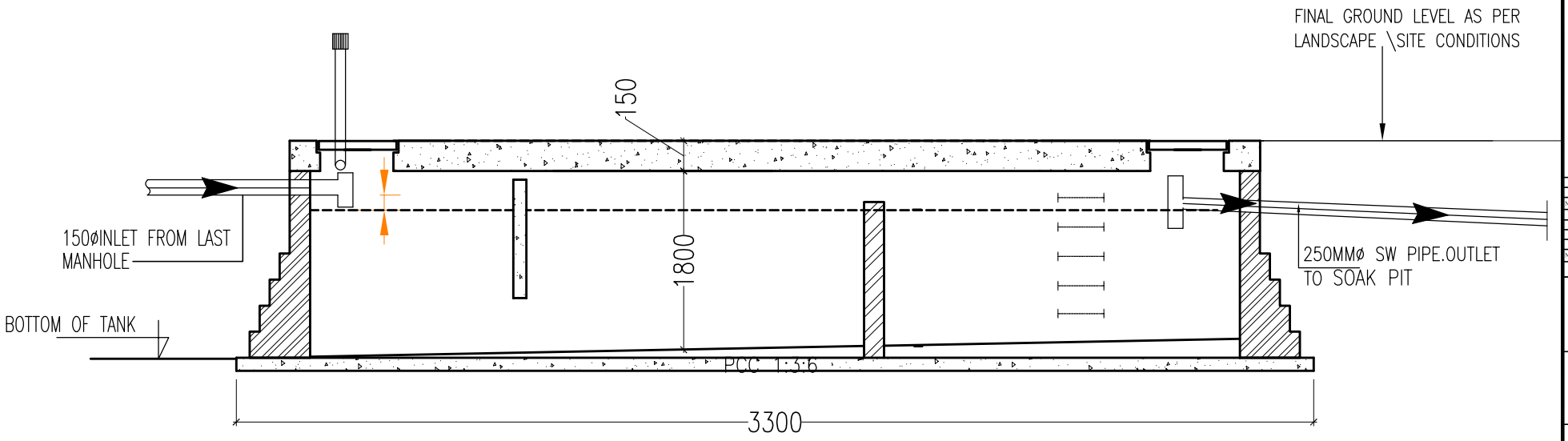

SECTION - AA'
SEPTIC TANK

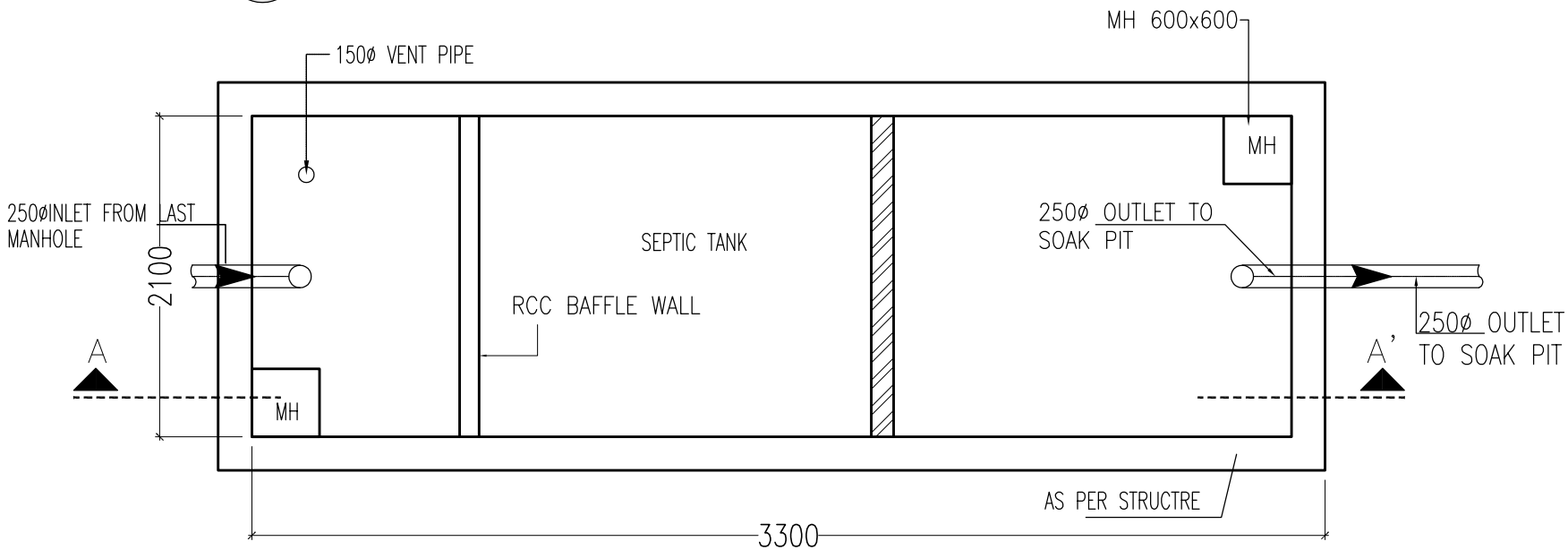

PLAN - SEPTIC TANK

TENDER DRAWING

Notes

- All dimensions are to be read and not to be scaled.
- Contractor must verify all dimensions as per site before commencement of any work.
- Contractor must notify Architect and/ or Project Manager of all discrepancies in the drawing & clarify with them.
- All door and window openings are to be verified as per schedule.
- All services to be co-ordinated with structures.
- Contractor must take approval of layout from Architect before start of construction.
- Architectural drawings are to be co-related with structural drawings.

No.	Date	By	Description

ISSUES

No.	Date	By	Description

Revisions

LOCAL AUTHORITY

R-SETI DIRECTOR

ARCHITECTS

Architects :
GEOTECH TECHNICAL ASSOCIATES (P) LTD.
G T A
7,MAHAMANAPURI COLONY,
I.T.I. ROAD,
VARANASI-221005
MOBILE : 9415268161
B-04, GROUND FLOOR,
AMIRAPALI PRINCELY ESTATE,
SECTOR 76, NOIDA-201301
MOBILE : 9910297218
9818938150

Client:
CANARA BANK CENTENARY
RURAL DEVELOPMENT TRUST

PROJECT TITLE
RURAL SELF EMPLOYMENT TRAINING INSTITUTE
AT AMROHA, UTTAR PRADESH

Job Title
MAIN BLOCK

Drawing Title :
DETAIL - SEPTIC TANK

Job No.		CE/CON./PLAN NO.
Drawn GAURAV	Checked AAMIR	CANARA/AM/RSETI-12
Date 17/03/2023	Scale 1:125 on A3	Revisions

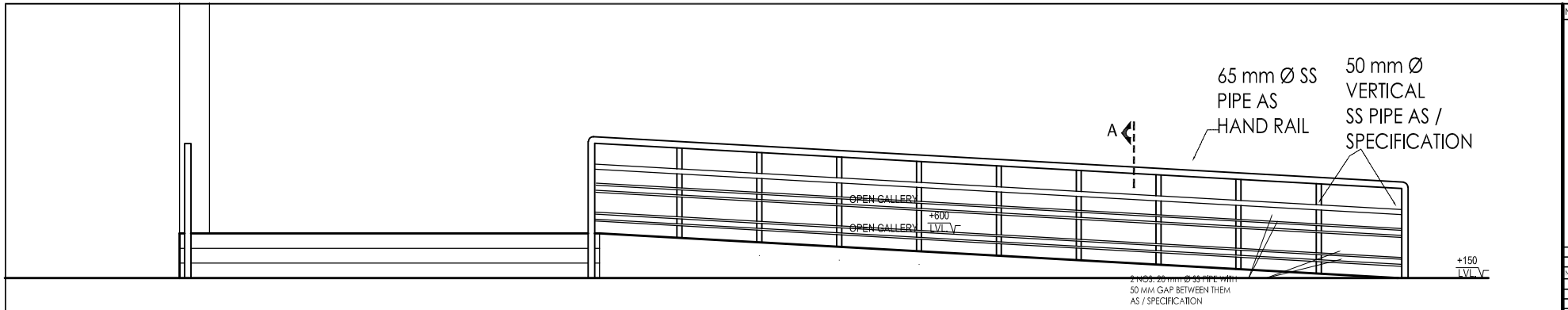

ELEVATION - 1

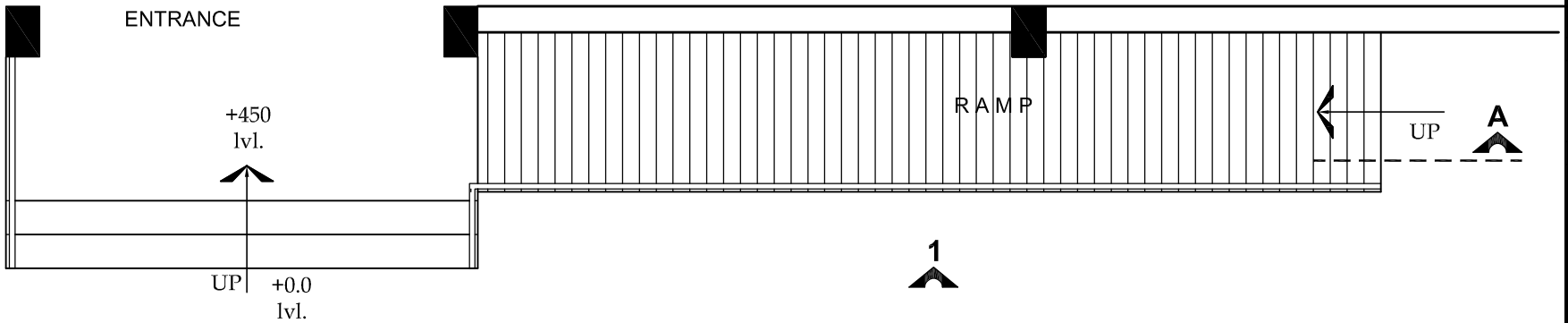

PLAN

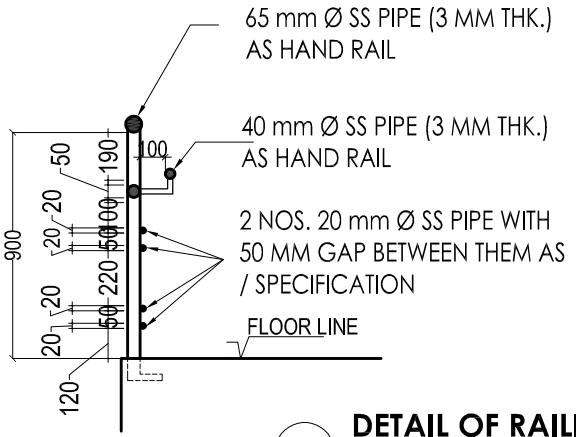

DETAIL OF RAILING (RAMP)

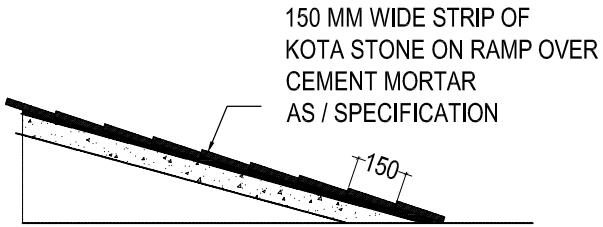

SECTION - A

TENDER DRAWING

Notes

- All dimensions are to be read and not to be scaled.
- Contractor must verify all dimensions as per site before commencement of any work.
- Contractor must notify Architect and/ or Project Manager of all discrepancies in the drawing & clarify with them.
- All door and window openings are to be verified as per schedule.
- All services to be co-ordinated with structures.
- Contractor must take approval of layout from Architect before start of construction.
- Architectural drawings are to be co-related with structural drawings.

No.	Date	By	Description

ISSUES

No.	Date	By	Description

Revisions

LOCAL AUTHORITY

R-SETI DIRECTOR

+450 ARCHITECTS

Architects :

GEOTECH TECHNICAL ASSOCIATES (P) LTD.

G T A

7,MAHAMANAPURI COLONY,
I.T.I. ROAD,
VARANASI-221005
MOBILE : 9415268161

B-04, GROUND FLOOR,
AMRAPALI PRINCELY ESTATE,
SECTOR 76, NOIDA-201301
MOBILE : 9910297218
9818938150

Client:

CANARA BANK CENTENARY RURAL DEVELOPMENT TRUST

PROJECT TITLE

RURAL SELF EMPLOYMENT TRAINING INSTITUTE

AT AMROHA, UTTAR PRADESH

Job Title

MAIN BLOCK

Drawing Title :

RAMP DETAIL

Job No.		CE/CON./PLAN NO.
Drawn GAURAV	Checked AAMIR	CANARA/AM/RSETI - 11
Date 17/03/2023	Scale 1:125 on A3	Revisions

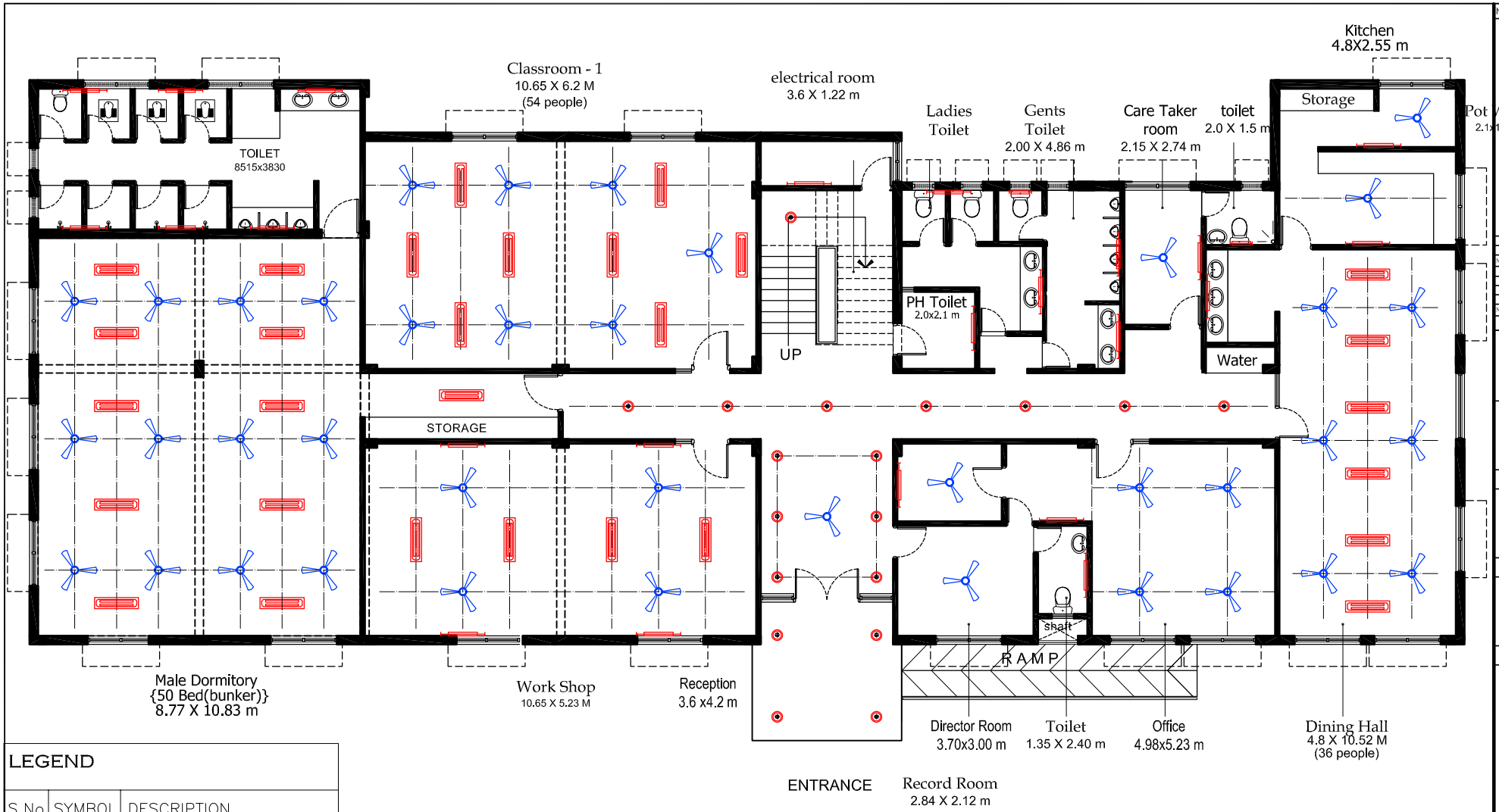

LEGEND

S.No.	SYMBOL	DESCRIPTION
1		BATTEN LIGHT (4ft)
2		BATTEN LIGHT (2ft)
3		1200 MM DIA. CEILING FAN
4		SURFACE MOUNTED LIGHT FOR CORRIDOR
5		SUSPENDED BOX TYPE TUBE LIGHT
6		
7		

TENDER DRAWING

North

Notes

- All dimensions are to be read and not to be scaled.
- Contractor must verify all dimensions as per site before commencement of any work.
- Contractor must notify Architect and/ or Project Manager of all discrepancies in the drawing & clarify with them.
- All door and window openings are to be verified as per schedule.
- All services to be co-ordinated with structures.
- Contractor must take approval of layout from Architect before start of construction.
- Architectural drawings are to be co-related with structural drawings.

No.	Date	By	Description

ISSUES

No.	Date	By	Description

Revisions

LOCAL AUTHORITY

R-SETI DIRECTOR

ARCHITECTS

Architects :
GEOTECH TECHNICAL ASSOCIATES (P) LTD.
G T A
7,MAHAMANAPURI COLONY,
I.T.I. ROAD,
VARANASI-221005
MOBILE : 9415268161
•
B-04, GROUND FLOOR,
AMRAPALI PRINCELY ESTATE,
SECTOR 76, NOIDA-201301
MOBILE : 9910297218
9818938150

Client:
CANARA BANK CENTENARY RURAL DEVELOPMENT TRUST

PROJECT TITLE
RURAL SELF EMPLOYMENT TRAINING INSTITUTE
AT AMROHA, UTTAR PRADESH

Job Title
MAIN BLOCK

Drawing Title :
LIGHTING PLAN GROUND FLOOR

Job No.		CE/CON./PLAN NO.
Drawn GAURAV	Checked AAMIR	CANARA/RSETI, EL - 01
Date 06/04/2022	Scale 1:125 on A3	Revisions 01 02 03

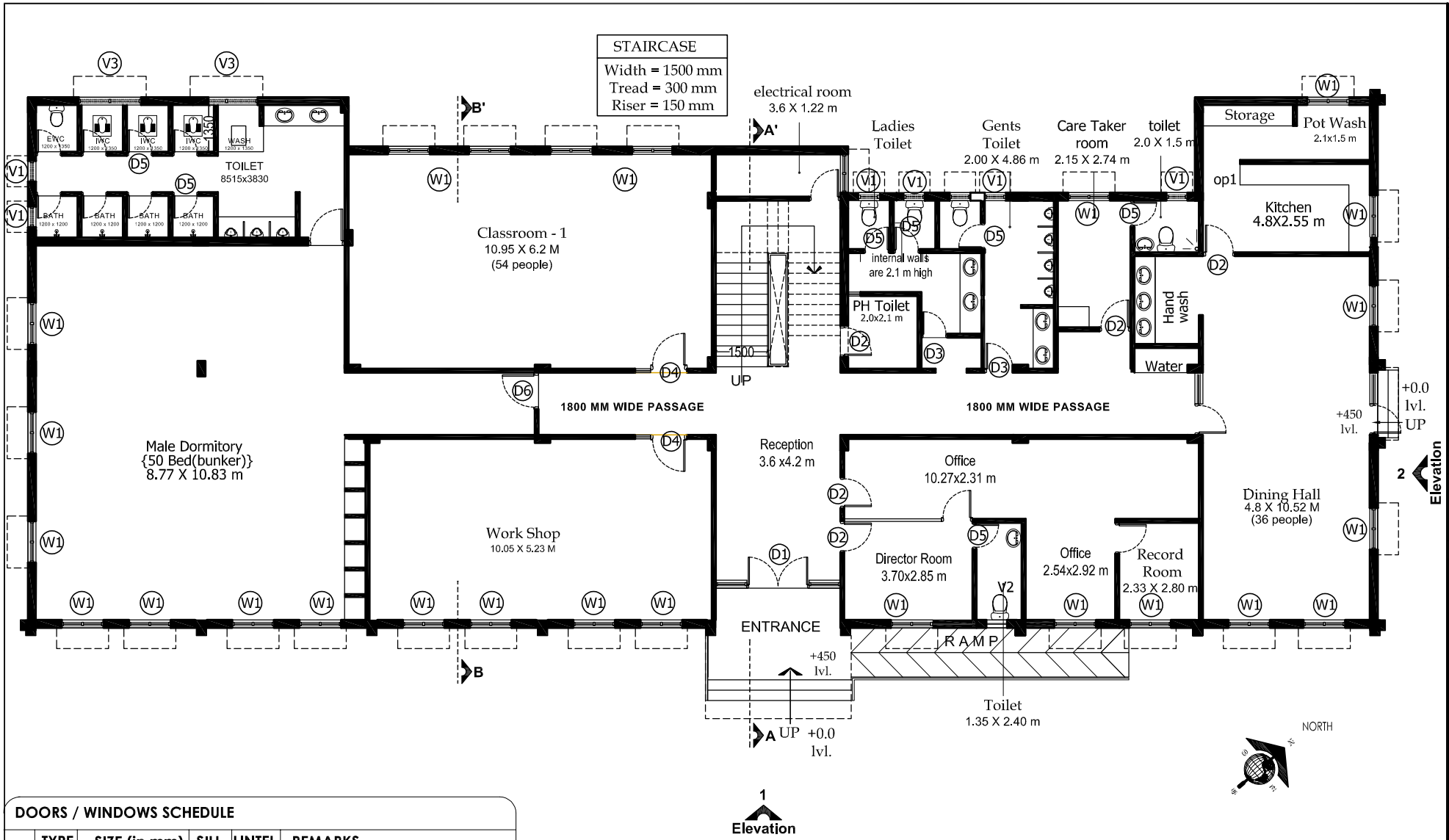

DOORS / WINDOWS SCHEDULE

S.NO.	TYPE	SIZE (in mm)		SILL	LINTEL	REMARKS
		WIDTH	HEIGHT			
1.	D 1	3600	2400	-	2400	Glazed Aluminium Door+window
2.	D 2	900	2100	-	2100	Flush Door
3.	D 3	750	2100	-	2100	Flush Door
4.	D 4	1500	2100	-	2100	Flush Door
5.	D5	750	2100	-	2100	PVC Door
6.	D6	1050	2100	-	2100	Flush Door
7.	D7	1800	2100	-	2100	Aluminium Door + window
8.	W1	1800	1800	900	2700	Aluminium Sliding Window
9.	V1	600	450	2250	2700	Aluminium Ventilator
10.	V2	600	1200	2250	2700	Aluminium Window
11.	V3	1800	450	2250	2700	Aluminium Ventilator
12.	op1	1050	2100	-	2100	opening in brickwork

		BUILD UP AREA (in SqMtrs.)	BUILD UP AREA (in sqft.)
1.	GROUND FLOOR	544.96	5863.76
2.	FIRST FLOOR	372.54	4008.53
3.	MUMTY	929.78	132.15
	TOTAL	**929.78**	**10004.44**

TENDER DRAWING

Notes

- All dimensions are to be read and not to be scaled.
- Contractor must verify all dimensions as per site before commencement of any work.
- Contractor must notify Architect and/ or Project Manager of all discrepancies in the drawing & clarify with them.
- All door and window openings are to be verified as per schedule.
- All services to be co-ordinated with structures.
- Contractor must take approval of layout from Architect before start of construction.
- Architectural drawings are to be co-related with structural drawings.

No.	Date	By	Description

ISSUES

No.	Date	By	Description

Revisions

LOCAL AUTHORITY

R-SETI DIRECTOR

ARCHITECTS

Architects :
GEOTECH TECHNICAL ASSOCIATES (P) LTD.
G T A
7,MAHAMANAPURI COLONY,
I.T.I. ROAD,
VARANASI-221005
MOBILE : 9415268161
B-04, GROUND FLOOR,
AMRAPALI PRINCELY ESTATE,
SECTOR 76, NOIDA-201301
MOBILE : 9910297218
9818938150

Client:
CANARA BANK CENTENARY RURAL DEVELOPMENT TRUST

PROJECT TITLE
RURAL SELF EMPLOYMENT TRAINING INSTITUTE
AT AMROHA, UTTAR PRADESH

Job Title
MAIN BLOCK

Drawing Title :
GROUND FLOOR PLAN

Job No.	CE/CON./PLAN NO.
	CANARA/AM/RSETI - 01
Drawn GAURAV / Checked AAMIR	
Date 06/04/2022 / Scale 1:125 on A3	Revisions 1 2 3